**Cambridge International Examinations**
Cambridge International General Certificate of Secondary Education

**CHEMISTRY** **0620/13**

Paper 1 Multiple Choice **October/November 2014**

**45 Minutes**

Additional Materials: Multiple Choice Answer Sheet
Soft clean eraser
Soft pencil (type B or HB is recommended)

**READ THESE INSTRUCTIONS FIRST**

Write in soft pencil.
Do not use staples, paper clips, glue or correction fluid.
Write your name, Centre number and candidate number on the Answer Sheet in the spaces provided unless this has been done for you.
DO **NOT** WRITE IN ANY BARCODES.

There are **forty** questions on this paper. Answer **all** questions. For each question there are four possible answers **A**, **B**, **C** and **D**.
Choose the **one** you consider correct and record your choice in **soft pencil** on the separate Answer Sheet.

**Read the instructions on the Answer Sheet very carefully.**

Each correct answer will score one mark. A mark will not be deducted for a wrong answer.
Any rough working should be done in this booklet.
A copy of the Periodic Table is printed on page 16.
Electronic calculators may be used.

The syllabus is approved for use in England, Wales and Northern Ireland as a Cambridge International Level 1/Level 2 Certificate.

This document consists of **14** printed pages and **2** blank pages.


© UCLES 2014

**1** A few drops of perfume were spilt on the floor. A few minutes later the perfume could be smelt a few metres away.

Which two processes had taken place?

**A** distillation and condensation

**B** distillation and diffusion

**C** evaporation and condensation

**D** evaporation and diffusion

**2** The diagram shows three pieces of apparatus that are used for measuring the volume of a liquid.

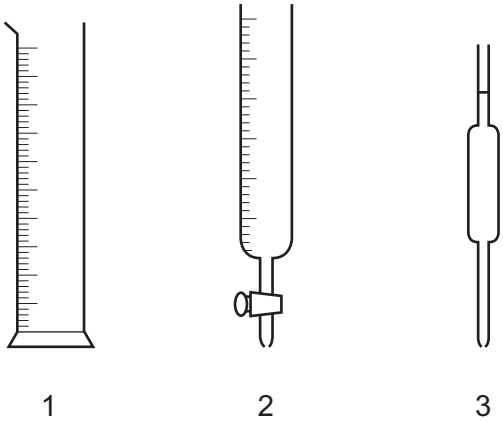


What are these pieces of apparatus?

| | 1 | 2 | 3 |
|---|---|---|---|
| **A** | burette | measuring cylinder | pipette |
| **B** | burette | pipette | measuring cylinder |
| **C** | measuring cylinder | burette | pipette |
| **D** | measuring cylinder | pipette | burette |

**3** A student is investigating a coloured mixture using chromatography.

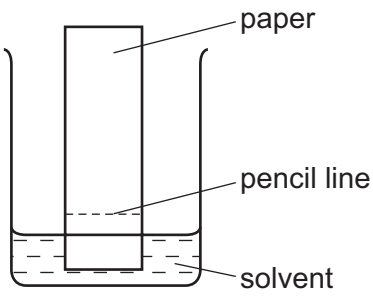


Where should he place the coloured mixture?

**A** in the solvent

**B** just above the pencil line

**C** just below the pencil line

**D** on the pencil line

**4** Which statement about a neutron is **not** correct?

**A** It can be present in different numbers in atoms of the same element.

**B** It has no electrical charge.

**C** It is always found in the nucleus of an atom.

**D** It weighs much less than a proton.

**5** Which element has the atomic structure shown?

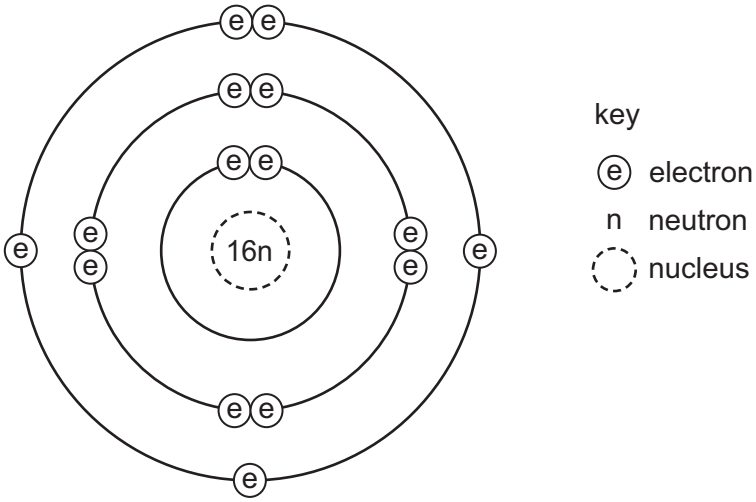


**A** A*l* **B** P **C** S **D** Si

**6** Slate has a layered structure and can easily be split into thin sheets.

Which diagram shows a structure most like that of slate?

**A**

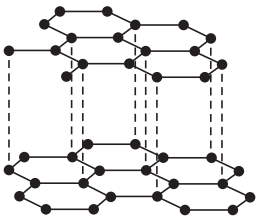

**B**

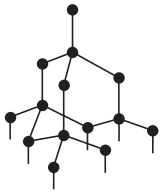

**C**

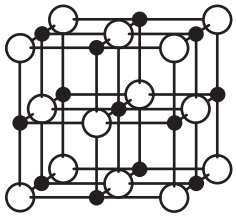

**D**

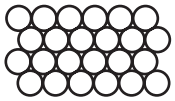

**7** Element X, $^{19}_{9}X$, forms a compound with element Y, $^{39}_{19}Y$.

Which statement describes the bonding in the compound formed?

**A** X and Y share electrons.

**B** X gives away one electron to Y.

**C** Y gives away one electron to X.

**D** Y gives away two electrons to X.

**8** Which substance is methane?

| | volatility | electrical conductivity at room temperature | solubility in water |
|---|---|---|---|
| **A** | high | good | soluble |
| **B** | high | poor | insoluble |
| **C** | low | good | soluble |
| **D** | low | poor | insoluble |

**9** The table shows the numbers of atoms present in the formula of some compounds.

Which row is **not** correct?

| | numbers of atoms | formula |
|---|---|---|
| **A** | 1 × calcium, 1 × carbon, 3 × oxygen | $CaCO_3$ |
| **B** | 1 × carbon, 5 × hydrogen, 1 × oxygen | $C_2H_5OH$ |
| **C** | 1 × hydrogen, 1 × oxygen, 1 × sodium | NaOH |
| **D** | 2 × hydrogen, 4 × oxygen, 1 × sulfur | $H_2SO_4$ |

© UCLES 2014

**10** An element, X, can be represented as $^{a}_{b}X$.

Which statement is correct?

**A** The number of protons in an atom of X is **a**.

**B** The exact position of X in the Periodic Table can be found from **a**.

**C** The relative atomic mass of X is **b**.

**D** The total number of electrons in one atom of X is **b**.

**11** A student wishes to electroplate an object with copper.

Which row is correct?

| | object is made the | a suitable electrolyte is |
|---|---|---|
| **A** | anode | CuO(s) |
| **B** | anode | $CuSO_4$(aq) |
| **C** | cathode | CuO(s) |
| **D** | cathode | $CuSO_4$(aq) |

**12** In the electrolysis shown, chlorine is produced at W and sodium at X.

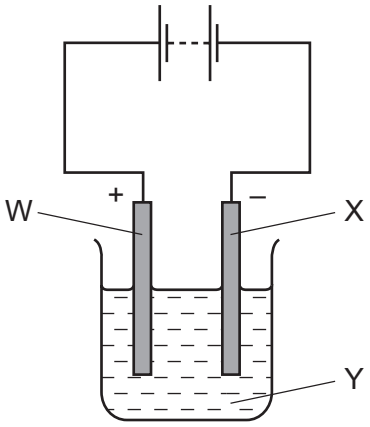


Which labels are correct?

| | W | X | Y |
|---|---|---|---|
| **A** | anode | cathode | NaC*l* (l) |
| **B** | anode | cathode | NaC*l* (aq) |
| **C** | cathode | anode | NaC*l* (l) |
| **D** | cathode | anode | NaC*l* (aq) |

**13** What occurs when a fuel burns?

| | fuel reacts with oxygen | energy change |
|---|---|---|
| **A** | no | endothermic |
| **B** | no | exothermic |
| **C** | yes | endothermic |
| **D** | yes | exothermic |

**14** Which fuel does **not** produce air pollution when it burns?

**A** coal

**B** diesel oil

**C** hydrogen

**D** gasoline (petrol)

**15** Which graph shows the effect of increasing temperature on the rate of reaction of calcium carbonate with dilute hydrochloric acid?

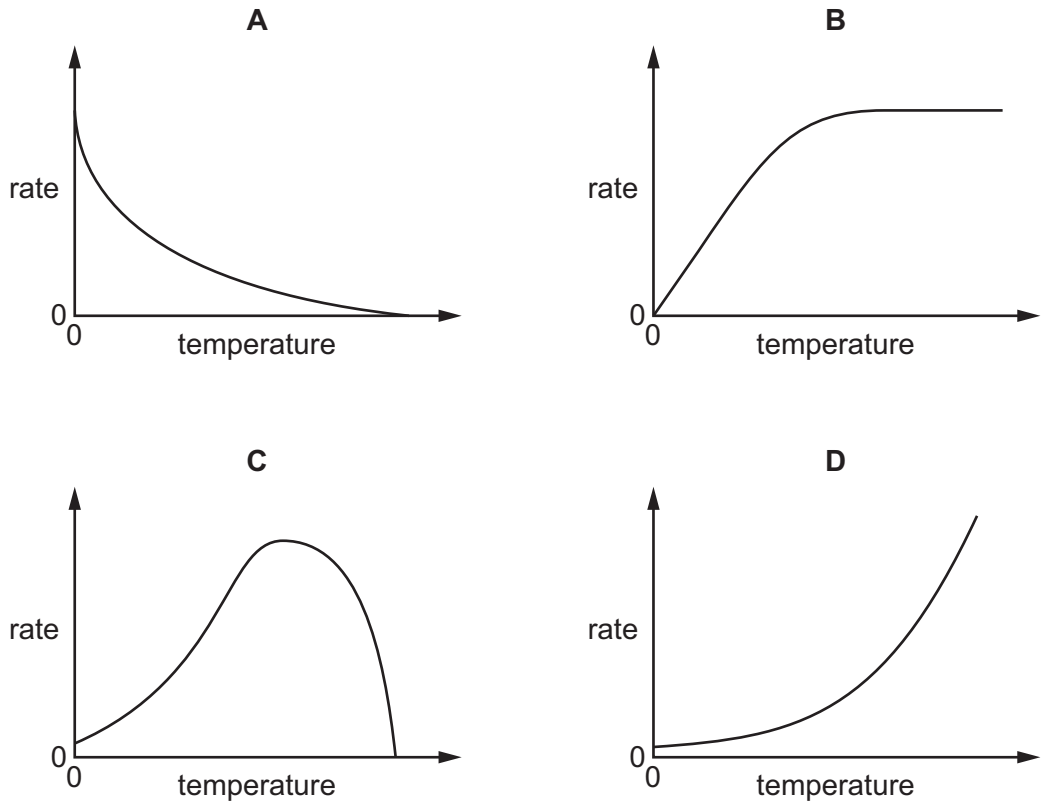

**16** The diagram shows the change from an anhydrous salt to its hydrated form.

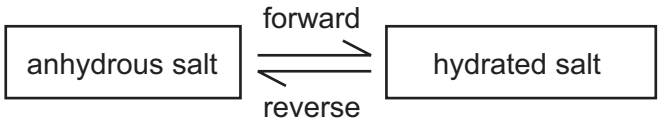


Which statement is correct?

**A** forward reaction requires heat and water

**B** forward reaction requires water only

**C** reverse reaction requires heat and water

**D** reverse reaction requires water only

**17** The equations for two reactions P and Q are given.

P $2\underline{NaNO_2} + O_2 \rightarrow 2NaNO_3$

Q $2\underline{HgO} \rightarrow 2Hg + O_2$

In which of these reactions does oxidation of the underlined substance occur?

| | P | Q |
|---|---|---|
| **A** | ✓ | ✓ |
| **B** | ✓ | ✗ |
| **C** | ✗ | ✓ |
| **D** | ✗ | ✗ |

**18** Which changes decrease the rate of reaction between magnesium and air?

1 heating the magnesium to a higher temperature

2 using a higher proportion of oxygen in the air

3 using magnesium ribbon instead of powdered magnesium

**A** 1, 2 and 3 **B** 1 only **C** 2 only **D** 3 only

**19** A colourless solution is tested by the following reactions.

Which reaction is **not** characteristic of an acid?

**A** A piece of magnesium ribbon is added. Bubbles are seen and the magnesium disappears.

**B** A pungent smelling gas is produced when ammonium carbonate is added.

**C** Copper oxide powder is added and the mixed is warmed. The solution turns blue.

**D** The solution turns blue litmus red.

**20** Which statement about oxides is correct?

**A** A solution of magnesium oxide will have a pH less than 7.

**B** A solution of sulfur dioxide will have a pH greater than 7.

**C** Magnesium oxide will react with nitric acid to make a salt.

**D** Sulfur dioxide will react with hydrochloric acid to make a salt.

**21** Which salt preparation uses a burette and a pipette?

**A** calcium nitrate from calcium carbonate and nitric acid

**B** copper(II) sulfate from copper(II) hydroxide and sulfuric acid

**C** potassium chloride from potassium hydroxide and hydrochloric acid

**D** zinc chloride from zinc and hydrochloric acid

**22** The graph shows how the pH of soil in a field changes over time.

At which point was the soil neutral?

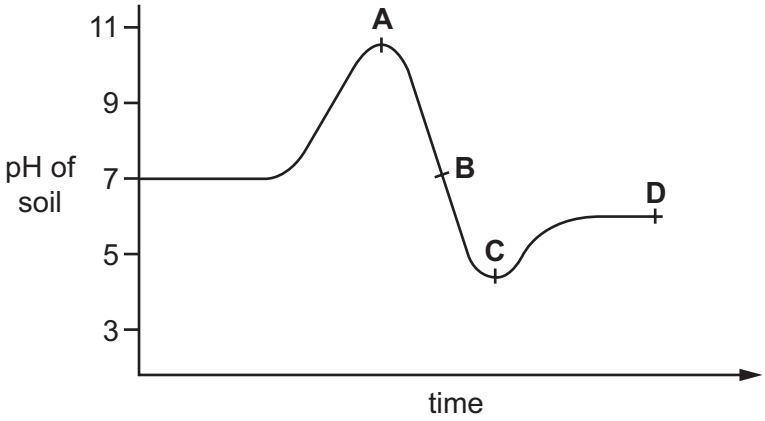


**23** Which statement about the elements of Group I is correct?

**A** Lithium is more dense than sodium.

**B** Potassium has a higher density than lithium.

**C** Potassium is less reactive than sodium.

**D** Sodium has a higher melting point than lithium.

**24** An element X has the two properties listed.

1 It acts as a catalyst.

2 It forms colourless ions.

Which of these properties suggest that X is a transition element?

| | property 1 | property 2 |
|---|---|---|
| **A** | ✓ | ✓ |
| **B** | ✓ | ✗ |
| **C** | ✗ | ✓ |
| **D** | ✗ | ✗ |

**25** An inert gas X is used to fill weather balloons.

Which descriptions of X are correct?

| | number of outer electrons in atoms of X | structure of gas X |
|---|---|---|
| **A** | 2 | single atoms |
| **B** | 2 | diatomic molecules |
| **C** | 8 | single atoms |
| **D** | 8 | diatomic molecules |

**26** The metal beryllium does not react with cold water.

It reacts with hydrochloric acid but cannot be extracted from its ore by using carbon.

Where should it be placed in the reactivity series?

magnesium
**A**
zinc
**B**
iron
**C**
copper
**D**

**27** Which information about an element can be used to predict its chemical properties?

**A** boiling point

**B** density

**C** melting point

**D** position in the Periodic Table

**28** A list of properties of aluminium is shown.

1 It conducts heat.

2 It has a low density.

3 It is resistant to corrosion.

Which properties make aluminium useful for making food storage containers?

**A** 1, 2 and 3 **B** 1 and 3 only **C** 1 only **D** 3 only

**29** Which metal is commonly used to form alloys with a non-metallic element?

**A** copper

**B** iron

**C** magnesium

**D** zinc

**30** Which object is **least** likely to contain aluminium?

**A** a bicycle frame

**B** a hammer

**C** a saucepan

**D** an aeroplane body

**31** Which process does **not** involve oxidation?

**A** burning a fossil fuel

**B** conversion of iron from the blast furnace into steel

**C** distillation of crude oil

**D** rusting of iron

© UCLES 2014

**32** Which pair of compounds would make a N, P, K fertiliser?

**A** ammonium sulfate and potassium phosphate

**B** calcium hydroxide and ammonium nitrate

**C** calcium phosphate and potassium chloride

**D** potassium nitrate and ammonium sulfate.

**33** Which method of purification would produce water **most** suitable for drinking?

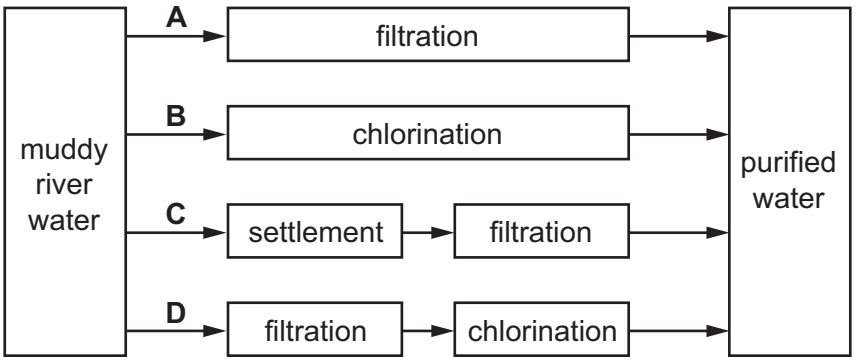


**34** Which statement about methane is **not** correct?

**A** It is a liquid produced by distilling petroleum.

**B** It is produced as vegetation decomposes.

**C** It is produced by animals, such as cows.

**D** It is used as a fuel.

**35** A man blows up a balloon.

What is the approximate composition of his exhaled air in the balloon?

| | % composition | | |
|---|---|---|---|
| | carbon dioxide | oxygen | nitrogen |
| **A** | 0.03 | 20 | 79 |
| **B** | 0.03 | 79 | 20 |
| **C** | 4 | 16 | 79 |
| **D** | 4 | 20 | 75 |

**36** Increasing the number of atoms in one molecule of a hydrocarbon increases the amount of energy released when it burns.

What is the correct order?

| | less energy released | → | more energy released |
|---|---|---|---|
| **A** | ethene | ethane | methane |
| **B** | ethene | methane | ethane |
| **C** | methane | ethane | ethene |
| **D** | methane | ethene | ethane |

**37** The list gives the names of four organic compounds.

ethane

ethanoic acid

ethanol

ethene

Which bond do all four compounds contain?

**A** C–C **B** C=C **C** C–H **D** C–O

**38** The diagram shows a reaction sequence.

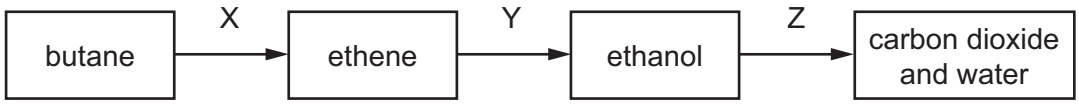


Which row names the processes X, Y and Z?

| | X | Y | Z |
|---|---|---|---|
| **A** | cracking | fermentation | respiration |
| **B** | cracking | hydration | combustion |
| **C** | distillation | fermentation | respiration |
| **D** | distillation | hydration | combustion |

**39** The main constituent of natural gas is hydrocarbon X.

To which homologous series does X belong and how many **atoms** are in one molecule of X?

| | homologous series | number of atoms in one molecule |
|---|---|---|
| **A** | alkane | 1 |
| **B** | alkane | 5 |
| **C** | alkene | 1 |
| **D** | alkene | 5 |

**40** The equation shows an industrial process.

$$H_2O + C_2H_4 \xrightarrow{\text{catalyst}} \text{compound X}$$

What is the name of compound X?

**A** ethane

**B** ethanoic acid

**C** ethanol

**D** methanol

**BLANK PAGE**

**BLANK PAGE**

# DATA SHEET
## The Periodic Table of the Elements

| Group I | Group II | | | | | | | | | | | Group III | Group IV | Group V | Group VI | Group VII | Group 0 |
|---|---|---|---|---|---|---|---|---|---|---|---|---|---|---|---|---|---|
| | | | | | | | 1 **H** Hydrogen 1 | | | | | | | | | | 4 **He** Helium 2 |
| 7 **Li** Lithium 3 | 9 **Be** Beryllium 4 | | | | | | | | | | | 11 **B** Boron 5 | 12 **C** Carbon 6 | 14 **N** Nitrogen 7 | 16 **O** Oxygen 8 | 19 **F** Fluorine 9 | 20 **Ne** Neon 10 |
| 23 **Na** Sodium 11 | 24 **Mg** Magnesium 12 | | | | | | | | | | | 27 **Al** Aluminium 13 | 28 **Si** Silicon 14 | 31 **P** Phosphorus 15 | 32 **S** Sulfur 16 | 35.5 **Cl** Chlorine 17 | 40 **Ar** Argon 18 |
| 39 **K** Potassium 19 | 40 **Ca** Calcium 20 | 45 **Sc** Scandium 21 | 48 **Ti** Titanium 22 | 51 **V** Vanadium 23 | 52 **Cr** Chromium 24 | 55 **Mn** Manganese 25 | 56 **Fe** Iron 26 | 59 **Co** Cobalt 27 | 59 **Ni** Nickel 28 | 64 **Cu** Copper 29 | 65 **Zn** Zinc 30 | 70 **Ga** Gallium 31 | 73 **Ge** Germanium 32 | 75 **As** Arsenic 33 | 79 **Se** Selenium 34 | 80 **Br** Bromine 35 | 84 **Kr** Krypton 36 |
| 85 **Rb** Rubidium 37 | 88 **Sr** Strontium 38 | 89 **Y** Yttrium 39 | 91 **Zr** Zirconium 40 | 93 **Nb** Niobium 41 | 96 **Mo** Molybdenum 42 | **Tc** Technetium 43 | 101 **Ru** Ruthenium 44 | 103 **Rh** Rhodium 45 | 106 **Pd** Palladium 46 | 108 **Ag** Silver 47 | 112 **Cd** Cadmium 48 | 115 **In** Indium 49 | 119 **Sn** Tin 50 | 122 **Sb** Antimony 51 | 128 **Te** Tellurium 52 | 127 **I** Iodine 53 | 131 **Xe** Xenon 54 |
| 133 **Cs** Caesium 55 | 137 **Ba** Barium 56 | 139 **La** Lanthanum 57 * | 178 **Hf** Hafnium 72 | 181 **Ta** Tantalum 73 | 184 **W** Tungsten 74 | 186 **Re** Rhenium 75 | 190 **Os** Osmium 76 | 192 **Ir** Iridium 77 | 195 **Pt** Platinum 78 | 197 **Au** Gold 79 | 201 **Hg** Mercury 80 | 204 **Tl** Thallium 81 | 207 **Pb** Lead 82 | 209 **Bi** Bismuth 83 | **Po** Polonium 84 | **At** Astatine 85 | **Rn** Radon 86 |
| **Fr** Francium 87 | 226 **Ra** Radium 88 | 227 **Ac** Actinium 89 † | | | | | | | | | | | | | | | |

| | | | | | | | | | | | | | |
|---|---|---|---|---|---|---|---|---|---|---|---|---|---|
| 140 **Ce** Cerium 58 | 141 **Pr** Praseodymium 59 | 144 **Nd** Neodymium 60 | **Pm** Promethium 61 | 150 **Sm** Samarium 62 | 152 **Eu** Europium 63 | 157 **Gd** Gadolinium 64 | 159 **Tb** Terbium 65 | 162 **Dy** Dysprosium 66 | 165 **Ho** Holmium 67 | 167 **Er** Erbium 68 | 169 **Tm** Thulium 69 | 173 **Yb** Ytterbium 70 | 175 **Lu** Lutetium 71 |
| 232 **Th** Thorium 90 | **Pa** Protactinium 91 | 238 **U** Uranium 92 | **Np** Neptunium 93 | **Pu** Plutonium 94 | **Am** Americium 95 | **Cm** Curium 96 | **Bk** Berkelium 97 | **Cf** Californium 98 | **Es** Einsteinium 99 | **Fm** Fermium 100 | **Md** Mendelevium 101 | **No** Nobelium 102 | **Lr** Lawrencium 103 |

*58-71 Lanthanoid series
†90-103 Actinoid series

Key

| a |
|---|
| **X** |
| b |

a = relative atomic mass
**X** = atomic symbol
b = proton (atomic) number

The volume of one mole of any gas is 24 $dm^3$ at room temperature and pressure (r.t.p.).

Permission to reproduce items where third-party owned material protected by copyright is included has been sought and cleared where possible. Every reasonable effort has been made by the publisher (UCLES) to trace copyright holders, but if any items requiring clearance have unwittingly been included, the publisher will be pleased to make amends at the earliest possible opportunity.

Cambridge International Examinations is part of the Cambridge Assessment Group. Cambridge Assessment is the brand name of University of Cambridge Local Examinations Syndicate (UCLES), which is itself a department of the University of Cambridge.

© UCLES 2014